32/34 DFT

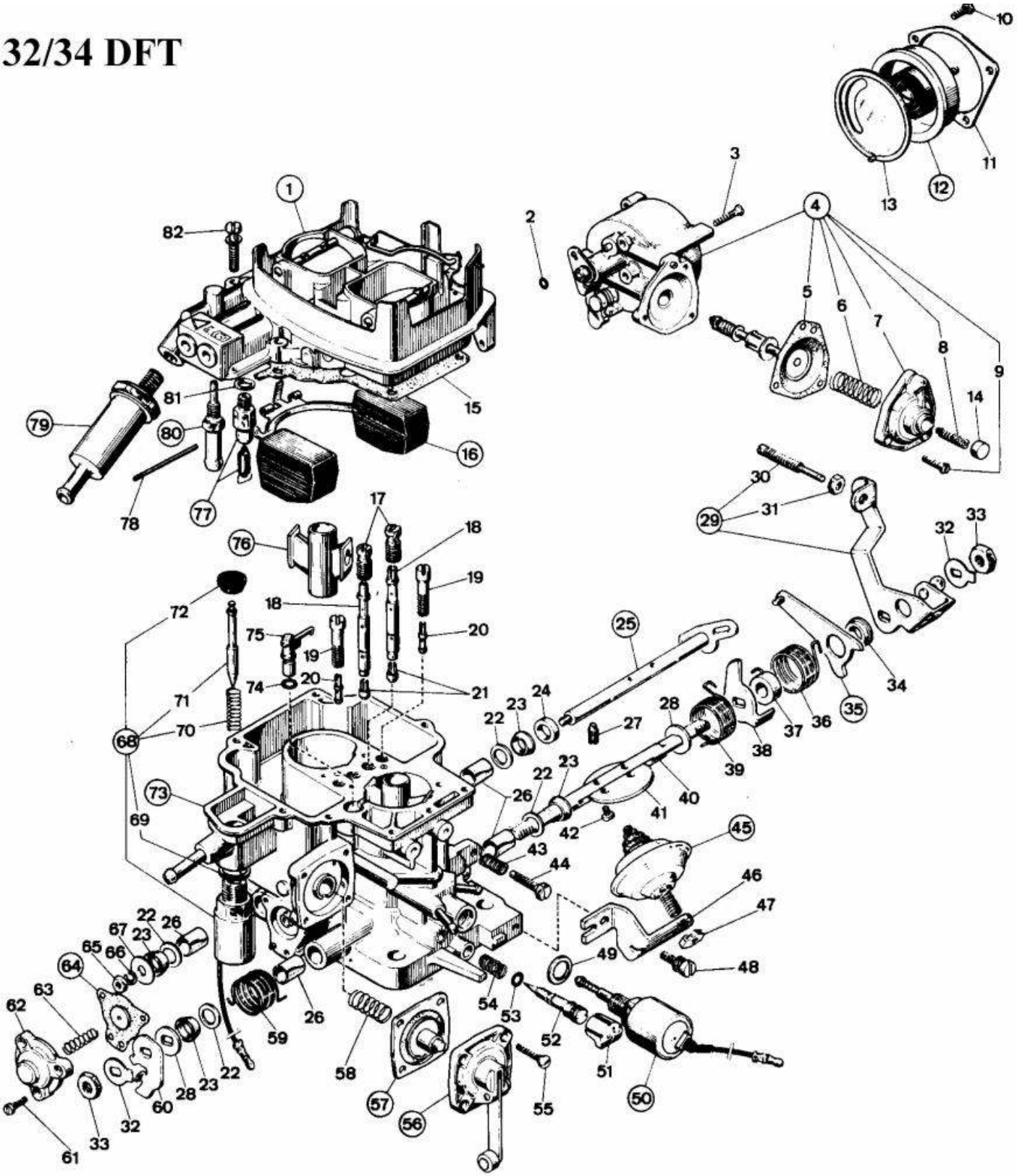
1
2
3
4
5
6
7
8
9
10
11
12
13
14
15
16
17
18
19
20
21
22
23
24
25
26
27
28
29
30
31
32
33
34
35
36
37
38
39
40
41
42
43
44
45
46
47
48
49
50
51
52
53
54
55
56
57
58
59
60
61
62
63
64
65
66
67
68
69
70
71
72
73
74
75
76
77
78
79
80
81
82

PARTS LIST
TYPE 32/34 DFT

Dia No.	Qty. Req'd	Description	Part Number		Dia No.	Qty. Req'd	Description	Part Number
1	1	Top Cover Assy	Not Serviced		42	4	Throttle Plate Fixing Screw	64520.027
2	1	Auto Choke O-Ring Seal	41565.008		43	1	Spring – Primary Throttle Lever	47600.007
3	3	Auto Choke Fixing Screw	64565.001		44	1	Primary Throttle Adjusting Screw	64625.012
4	1	Auto Choke Assy. *–Including*	57804.400		45	1	Dash Pot	10104.001
5	1	*-Choke Diaphragm*	47407.159		46	1	Dash Pot Bracket	Not Serviced
6	1	*-Diaphragm Loading Spring*	Not Serviced		47	1	Dash Pot Fixing Nut	34715.008
7	1	*-Diaphragm Cover*	Not Serviced		48	1	Dash Pot Bracket Fixing Screw	Not Serviced
8	1	*-Diaphragm Adjusting Screw*	Not Serviced		49	1	Idle Cut Off Solenoid Gasket	41535.003
9	3	*-Diaphragm Cover Fixing Screw*	Not Serviced		50	1	Idle Cut Off Solenoid	43840.013 Or .014
10	3	Plate Fixing Screw	64615.005		51	1	Mixture Screw Tamper Proof Plug	Not Serviced
11	1	Thermostat Housing Lock Ring	52135.029		52	1	Idle Mixture Adjusting Screw	64750.051
12	1	Thermostat Housing	57804.416		53	1	Mixture Screw O-Ring Seal	41565.001
13	1	Heat Sealing Gasket	41640.056		54	1	Idle Mixture Screw Spring	47600.095
14	1	*-Screw Plug*	Not Serviced		55	4	Pump Cover Fixing Screw	64565.001
15	1	Carburetor Cover Gasket	41705.057		56	1	Pump Cover	Not Serviced
16	1	Float	41030.012		57	1	Pump Diaphragm	47407.261
17	2	Air Correction Jet	77501.*		58	1	Pump Loading Spring	47600.107
18	2	Emulsion Tube	61450.*		59	1	Primary Shaft Return Spring	47610.012
19	2	Idle Jet Holder	52570.004		60	1	Pump Cam	Not Serviced
20	2	Idle Jet	74403.*		61	3	Power Valve Cover Fixing Screw	Not Serviced
21	2	Main Jet	73405.*		62	1	Power Valve Cover	Not Serviced
22	4	Washer	55510.087		63	1	Power Valve Diaphragm Spring	47600.131
23	4	Shaft Bearing Plate	52130.010		64	1	Power Valve Diaphragm	47407.156
24	1	Spacer	12750.085		65	1	Secondary Shaft Fixing Nut	34705.001
25	1	Secondary Shaft	10015.255		66	1	Spring Washer	55525.001
26	4	Shaft Bearing Plate	52130.010		67	1	Washer	Not Serviced
27	1	Secondary Throttle Adjusting Screw	Not Serviced		68	1	EVAP Solenoid *-Includes*	92.4052.05
28	2	Washer	55555.019		69	1	*-Gasket*	41535.009
29	1	Throttle Valve Control Lever - *Including*	Not Serviced		70	1	*-Spring*	Not Serviced
30	1	*-Fast Idle Adjusting Screw*	64595.025		71	1	*-Spindle*	Not Serviced
31	1	*-Adjusting Screw Fixing Nut*	34715.018		72	1	*-Sealing Valve*	Not Serviced
32	2	Lock Washer	55520.002		73	1	Carburetor Body	Not Serviced
33	2	Primary Shaft Fixing Nut	34715.014		74	1	Pump Jet O-Ring	41565.002
34	1	Bushing For Free Lever	12775.053		75	1	Pump Jet	76407.*
35	1	Free Lever	45069.015		76	2	Auxiliary Venturi	71115.*
36	1	Spring For Free Lever	47610.109		77	1	Needle Valve	79519.*
37	1	Spacer	12750.087		78	1	Float Fulcrum Pin	52000.036
38	1	Primary Throttle Control Lever	Not Serviced		79	1	Strainer	37022.005
39	1	Primary Shaft Return Spring	47610.118		80	1	Return Fuel Line Pipe	10525.032
40	1	Primary Shaft	Not Serviced		81	1	Needle Valve Gasket	83102.070
41	1	Primary Throttle Plate	64005.090		82	6	Carburetor Cover Fixing Screw	64700.005
							*Calibrated Parts Require 3 Digits to	
							Complete Part Number	
							See Calibrated Parts Section For Sizes	